## 3.5 Entries to Upper Levels

STANDARD

**3.5.1** At mixed use buildings, entrances to residential, office or other upper story uses shall be clearly distinguishable in form and location from retail entrances.

GUIDELINES

**3.5.2** Entrances to upper-story uses should be:

a) Accented by architectural elements such as clerestory windows, sidelights and ornamental light fixtures, and/or;

b) Indicated by a recessed entrance, vestibule or lobby.

**3.5.3** Doorways should be recessed for privacy but should be clearly expressed by awnings, high quality materials or other architectural treatments.


Entrance to upper floor

Retail entrance

## 3.6 Doors

Standards

**3.6.1** Doors at storefronts shall include windows that permit views into the establishment.

**3.6.2** Service or employee doors that are visible from public streets or walkways shall be an itegral part of the building design.

Guidelines

**3.6.2** Doors at storefronts with windows should match the materials, design and character of the display window framing. High quality materials such as crafted wood, stainless steel, bronze and other ornamental metals are recommended.

**3.6.3** Detailing such as carved woodwork, stonework or applied ornament should be used to create noticeable detail for pedestrians and drivers. Doors may be flanked by columns, decorative fixtures or other details.

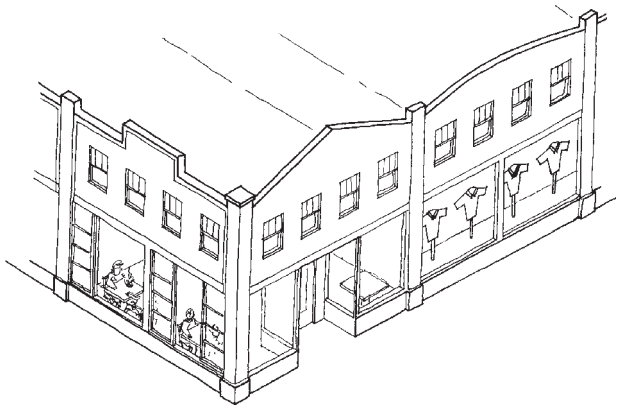

Storefront doors are similar to the windows.

## 3.7 Windows

Standards

**3.7.1** All windows on a building shall be related in design.

**3.7.2** Windows on the upper floors shall be smaller in size than storefront windows on the first floor and shall encompass a smaller proportion of façade surface area.

**3.7.3** Upper story windows shall be detailed with architectural elements, such as projecting sills, molded surrounds and/or lintels.

**3.7.4** Deeply tinted glass or applied films shall not be permitted.

**3.7.5** Where unique use or occupancy requirements preclude the addition of windows, such as theaters or parking structures, exterior walls shall be designed to provide architectural relief or shall be screened by landscaping and pedestrian amenities, such as trellises, benches or shade structures.

Windows with a vertical orientation.

GUIDELINES

**3.7.6** Buildings should include vertically proportioned façade openings with windows that have a greater height than width (an appropriate vertical/horizontal ratio ranges from 1.5:1 to 2:1). Where glazed horizontal openings are used, they shall be divided with multiple groups of vertical windows.

**3.7.7** The function and design of windows should be consistent with the use within.

**3.7.8** Windows should maintain consistency in shape and location across the façade. Unifying patterns should include common windows and doors. The overall effect should create a harmonious pattern along the streetscape.

**3.7.9** Commercial storefronts should include street-oriented display windows. These windows should provide visual access to the inside of the building, while also serving as an area for merchandise display.

**3.7.10** Enclosed display window areas should be provided where actual windows cannot be provided.

**3.7.11** A minimum of 60 percent of linear store frontage at the street façade should be used for the display windows and evenly distributed. No false fronts or windows should be included that are not integral components of the building.

**3.7.12** Display windows should be consistent with the storefront in style and detail.

**3.7.13** Ground floor retail windows should be of a storefront design and should be larger in proportion than residential windows.

**3.7.14** Commercial clerestory and transom windows are recommended to provide a continuous horizontal band or row of windows across the upper portion of the storefront.

**3.7.15** Large expanses of glass should not be used, except as storefront windows. Windows should be subdivided and separated by mullions. Snap-in muntins should not be used.

Retail space in ground floor of parking structure.


Ground floor window are larger than those for the upper floor residential uses.

**3.7.16** Decorative treatments on windows or balconies are recommended and should be consistent with building style.
**3.7.17** Shaped frames and sills, detailed with architectural elements such as projecting sills, molded surrounds or lintels, should be used to enhance openings and add additional relief.
**3.7.18** Window frames should not be flush against the walls. Plaster reveals and wainscoting should be used to create the appearance of deep-set doors and windows.
**3.7.19** Clear glass is recommended. If tinted glazing is used, light tints and green, grey or blue hues are recommended. Deeply tinted glass is not permitted.
**3.7.20** Mirrored glass is strongly discouraged for retail uses, but may be used as an architectural element.
**3.7.21** Non-reflective films, coatings, low emissivity glass and external and internal shade devices should be used for heat and glare control.
**3.7.22** To add privacy and aesthetic variety to glass, fritted glass, spandrel glass and other decorative treatments are recommended.


Windows are typically larger for ground floor retail uses than they are for upper floor uses.

## 3.8 Awnings and Canopies

Standards

**3.8.1** Canopies over building entries shall be incorporated into the design of the building, including colors and material detailing.
**3.8.2** Backlighting of transparent or translucent awnings shall not be allowed.

Awnings fit to the horizontal components of the ground floor building structure.

GUIDELINES

**3.8.3** Awnings are encouraged, and if used, should be provided over each storefront of buildings with multiple storefronts. These awnings should be located within the individual structural bays and should not hide architectural detailing.

**3.8.4** Awnings on multi-tenant buildings should be the same color and style.

**3.8.5** Awning design should be consistent with the character and design of the building.

**3.8.6** The awning material should be compatible with the overall design and character of the building. The use of fabric awnings is encouraged. The use of vinyl and plastic awnings is discouraged.

**3.8.7** If used, lighting for awnings should be from fixtures located above the awnings, and should be placed to enhance the appearance of the building.

**3.8.8** Awning color(s) should be compatible with the overall building color scheme.

Awnings cantilever out from the façade.

## 3.9 Building Materials

GUIDELINES

**3.9.1** Within a design theme, a variety of durable materials and textures is strongly encouraged. Such materials may include both traditional materials, such as wood and stucco, and materials such as concrete, structural steel, corten steel, and other high-quality durable metals which have not been traditionally used in "Main Street" architecture.

**3.9.2** Differentiation of Architectural Elements

a) In concert with the primary building material(s), a variety of materials is encouraged to articulate different building elements, such as the ground floor façade, the building base, horizontal break bands, pier or column bases, roof terminations, sills, awnings and similar building components.

Differing but compimentary materials for the ground floor façade.

b) Building materials should be used to differentiate between commercial and residential uses, and should create a smooth transition between the two.
**3.9.3** The number of different materials used on the exterior of a structure should be limited to an appropriate and varied palette.
**3.9.4** Genuine materials should be utilized rather than simulated materials. Where simulated materials are used, they should be used in keeping with the character and properties of the material being simulated.
**3.9.5** Materials should be harmonious with adjacent buildings.
**3.9.6** Use of accent materials, such as metal or wood, should be used on all façades of the building, not just the front façadeof the building.

Tile base at streetfront cafe.

## 3.10 Color

### Standards

**3.10.1** Exterior building colors shall not become signs for the building or tenant.
**3.10.2** Avoid monotony among colors throughout the project site.

### Guidelines

**3.10.3** Exterior building colors should be compatible with surrounding buildings.
**3.10.4** Generally, building colors should not be garish.
**3.10.5** Primary colors and other bright colors can be used as accents to enliven the architecture, but should be used sparingly. Use accent colors to enhance visual interest.
**3.10.6** Color should be used to enhance architectural elements.


Subtle overall exterior building color with different color enhancing roof line.

## 4. Roof

*Intent: To ensure that the design of roofs contributes to the overall building design.*

### 4.1 Form

STANDARD

**4.1.1** The form, color and texture of the roof shall be an integral component of the building design.

GUIDELINES

**4.1.2** Roofs should be compatible with the architectural style of the building.

**4.1.3** The roof shape should reflect the configuration of the building's mass and volume, and should be consistent in its character from all vantage points.

**4.1.4** Sloping roof forms are encouraged.

### 4.2 Roof Lines

STANDARD

**4.2.1** All buildings shall provide cornice or parapet detailing in order to delineate a strong roofline along the primary façades.

GUIDELINE

**4.2.2** Cornices and horizontal bands of genuine materials, such as wood trim rather than foam are strongly encouraged.

Intricate parapet outlines on a mixed-use street.

## 4.3 Detailing

Guidelines

**4.3.1** False fronts, applied mansard forms and other artificial rooflines that are not an integral component of the architectural design should be avoided.

**4.3.2** Roofs should be proportionate to the building mass and incorporate cornices, eaves and overhangs.

**4.3.3** Flat or shallow-pitched roofs should be ornamented with shaped parapets or cornice treatments that terminate the top of the parapet wall.

## 4.4 Materials

Guideline

**4.4.1** Reflective roofing materials should not be used on roof surfaces that are visible from either ground level or elevated viewpoints, such as freeways.


Cornice detailing is an integral component of the overall façade design.

## 4.5 Rooftop Equipment

### Standards

**4.5.1** All roof-mounted mechanical, electrical and external communication equipment, such as satellite dishes and microwave towers, shall be screened from public view and architecturally integrated into the building design.

**4.5.2** Plans submitted for design review shall indicate how rooftop equipment will be screened.

### Guideline

**4.5.3** All such equipment, including vents and ducts, should be integrated into the roof design and, where possible, consolidated to a minimal number of locations.

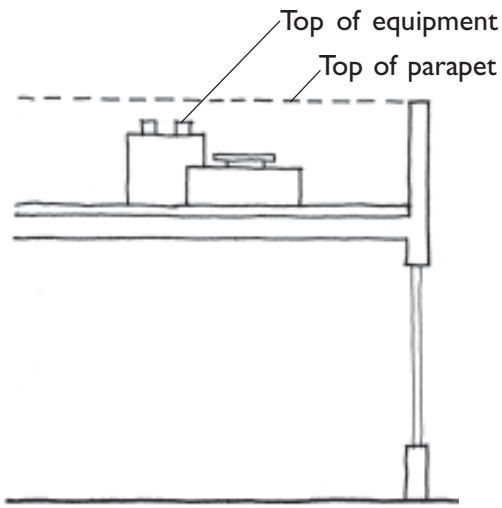

## D. *Landscaping Design*

The standards and guidelines in this section give design guidance for the landscaping components of projects in the mixed-use areas of the City. All landscaping shall comply with the water efficiency requirements of the City's Water Efficient Landscape Ordinance.

### 1. Coverage

*Intent: To provide adequate landscaping materials that enhance the appearance of mixed-use projects.*

Guideline

**1.1.1** Altogether, the landscaping required in setback areas, required open space areas, plazas and parking areas represents the minimum acceptable landscape coverage for sites. Developers are strongly encouraged to provide more than the minimum standard, particularly in publicly viewed areas, in order to create a more attractive environment for residents, employees and the general public.

### 2. Function

*Intent: To provide adequate pedestrian amenities and attractive environments between public streets and mixed-use development.*

Guideline

**2.1.1** Landscaping should be used to provide an attractive setting for development; soften hard building contours; shade walkways, parking areas and other large expanses of pavement; buffer and merge various uses; mitigate building height; and screen unsightly uses.

Landscaping along a walkway between retail and parking.

## 3. Layout

*Intent: To incorporate appropriate landscape materials that provide an aesthetically pleasing transition between the building and adjacent sidewalks or pedestrian paths.*

### 3.1 General

GUIDELINES

**3.1.1** Planting plans for building setbacks should include a hierarchy of plantings in terms of size and types of plant materials that mark the transition between the horizontal ground plane at the sidewalk or parking area and the tall, vertical façades of buildings.

**3.1.2** Landscaping close to the sidewalk should provide shade on the sidewalk, while also allowing views into the site. Denser plant material should be located closer to the building.

**3.1.3** Landscaping should enhance the built environment and contribute to the spatial organization of the site.

### 3.2 Street Frontage

STANDARDS

**3.2.1** Street trees shall be included along all street frontages of mixed-use development.

**3.2.2** Street trees shall be a minimum 24-inch box size and should be selected from a list of city approved trees.

GUIDELINES

**3.2.3** The selected trees should be broad branching, with a mature canopy spread of 40 feet and a high canopy to allow visibility of buildings.

**3.2.4** Utilize the City's street tree list when choosing street frontage trees.

Street trees are an important pedestrian amenity.

## 3.3 Setbacks

Standard

**3.3.1** Parking areas adjacent to street frontages shall have a minimum 10-foot landscaped setback between the sidewalk and the on-site parking spaces.

## 3.4 Parking Buffer

Standards

**3.4.1** All parking lots shall be separated from the street by a landscape buffer.

**3.4.2** At access points to off-street parking lots, a landscape buffer shall be provided between the curb and the parking area and shall be a minimum of ten feet deep.

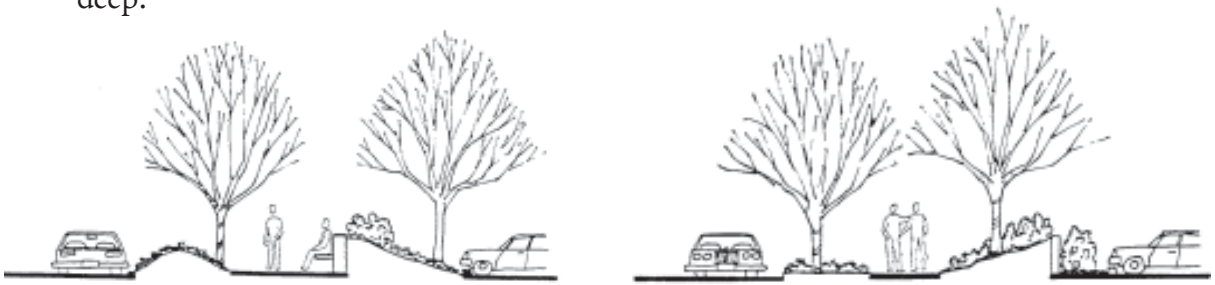

Combinations of berms, landscaping and low walls help screen parking areas from public views.

Guidelines

**3.4.3** For security purposes, openings should be incorporated into the landscape design to provide clear views into the site.

**3.4.4** Most plants in the buffer should be no higher than three-and-one-half feet in order to maintain maximum sight distances.

**3.4.5** Trees should be trimmed to maintain sight distances.

## 3.5 Focal Elements

GUIDELINE

**3.5.1** The use of trees for purposes of creating focal elements, including tree clusters, is encouraged. Such a design element would augment rather than replace required street tree planting.

## 3.6 Swales

STANDARD

**3.6.1** Drainage swales that are incorporated into landscape designs shall conform to the Water Resources Division's standards and guidelines for swales.

GUIDELINES

**3.6.2** Swales are strongly recommended to reduce water quality impacts associated with site runoff.

**3.6.3** Longitudinal slope of swales should be between 1% and 5%. Proposed swales with a slope of less than 1% will not be approved unless adequate underdrains are provided to prevent ponding. Swales of greater than 3% may be required to install check dams to reduce velocity through the swale.

**3.6.4** Side slopes should not exceed 3:1, horizontal:vertical.

**3.6.5** Swale bottom must be graded flat to improve pollutant removal. Swale bottom should ideally be at least 4 to 6 feet wide, with a minimum of 2 feet.

**3.6.6** Provide at least 1,200 square feet of usable swale area per acre of impervious surface.

Drainage swales for parking lot run-off reduce negative impact on overall water quality.

## 4. Materials

*Intent: To ensure that the landscaping materials are of an appropriate age and size that enables the materials to be fully functioning site amenities.*

### 4.1 Plant Selection

Standard

**4.1.1** Street trees and other plant materials within a public right-of-way shall be consistent with adopted City plans and regulations.

Guidelines

**4.1.2** Plant and landscape materials should be selected and sited to reflect both ornamental and functional characteristics. Full-canopied shade trees, greenery and brightly colored flowering materials all add to the overall positive impression of Livermore.

**4.1.3** A well-coordinated palette of plant species should be selected for general landscaping purposes, such as parking lots and setback areas.

**4.1.4** Plant species should be generally hardy and not require extensive maintenance.

**4.1.5** Species that are native or well-adapted to the climatic conditions in Livermore are preferable, since those will generally require less water and maintenance.

**4.1.6** Both seasonal and year-round flowering shrubs and trees should be used where they can be most appreciated, such as adjacent to walks and recreational areas or as a frame for building entrances and stairs.

**4.1.7** Evergreen shrubs and trees should be used for screening along rear property lines, around trash/recycling areas and mechanical equipment and to obscure grillwork and fencing associated with subsurface parking garages.

Landscaping with native, drought-tolerant plants.

**4.1.8** In general, deciduous trees with open branching structures are recommended to ensure visibility to retail establishments, and shade trees that are more substantial are recommended in front of private residences.
**4.1.9** Loose materials such as gravel, wood chips and bark that are frequently used for groundcovers in residential settings should not be used in commercial mixed-use developments. Instead, groundcover should consist predominantly of plant materials.

## 4.2 Plant Size and Scale

STANDARD
**4.2.1** The following minimum sizes for plant materials are required at the time of installation:
a) At a minimum, 20% of the trees shall have a 24-inch box container size or larger.
b) The remaining trees shall have a 15-gallon minimum container size and a one-inch caliper size at chest height.
c) Unless otherwise approved by the Design Review Committee, shrubs not used as ground cover shall have a five-gallon minimum container size, a minimum height of 18 inches and a minimum spread of 18 to 24 inches.

GUIDELINES
**4.2.2** Plant material should be sized and spaced such that a lush and mature appearance will be attained within two years of planting.
**4.2.3** Larger, more mature plant materials should be used in areas of particular importance, such as entries, to achieve an immediate effect.

**4.2.4** Ground cover should be spaced to provide complete coverage within one year of planting (i.e. 12 inches on center maximum for plants taken from flats; 18 to 24 inches on center for material from one-gallon containers).
**4.2.5** The scale and nature of landscape materials should be appropriate to the site and structure.
**4.2.6** Large structures and large open sites should be complemented with large scale material, such as plants, rocks, timbers, walls and fences.
**4.2.7** Mature sizes of plant materials need to be considered when selecting plant species.
**4.2.8** Root barriers should be provided within 5 feet of a sidewalk or wall.

## 4.3 Irrigation

Standards

**4.3.1** All landscaped areas shall have automatic irrigation systems installed to ensure that plant materials survive. It is particularly important in mixed-use development that irrigation systems are designed so as not to overspray public walks, paved areas and buildings.
**4.3.2** Irrigation plans shall be submitted demonstrating compliance with the City's Water Efficient Landscape Ordinance.

## 4.4 Maintenance

Standard

**4.4.1** Landscaped areas, including trees and other planting, as well as paving and walls shall be regularly maintained.

## 5. Plazas and Open Space

*Intent: To ensure that outdoor areas for residents, employees and commercial patrons are aesthetically pleasing and promote greater activity in mixed-use areas.*

### 5.1 Public Open Space and Plazas

Publicly-accessible plazas and open spaces are encouraged to be provided in mixed-use developments.

STANDARDS

**5.1.1** Plazas and open space shall be landscaped and incorporate high quality paving materials, such as stone, concrete or tile.

**5.1.2** Outdoor pedestrian spaces shall include appropriate outdoor furniture, such as seating, walls, trash receptacles, bike racks and other elements.

GUIDELINES

**5.1.3** Projects should develop a comprehensive open space network that uses plazas and other open space elements to connect uses.

**5.1.4** Open space areas and the paths that link them should facilitate the integration of adjacent land uses on the site.

**5.1.5** Pedestrian amenities, such as plazas, courtyards and other open spaces should be considered for spaces between buildings.

**5.1.6** Buildings should be laid out to define the open space and should be positioned to be used by both residential and commercial uses.

**5.1.7** Where practical, outdoor areas should be visible from public streets or trail networks and accessible from the building as well as the street or potential network.

Public plaza with high quality paving material and furniture.

Small outdoor area adjacent to retail uses.

**5.1.8** Outdoor furniture should be coordinated with the design of the building.
**5.1.9** Pay phones and newspaper racks should be incorporated where appropriate.
**5.1.10** Ample landscaping with fountains and well-shaded seating areas are highly encouraged, as is the use of varied paving materials.
**5.1.11** Plant materials should be of a drought-tolerant species where appropriate and provide variety, while being consistent with the architectural design of the building.
**5.1.12** Decorative tree grates should be used in pedestrian areas.
**5.1.13** When plaza is adjacent to a parking area, landscaping should be provided for screening purposes.

## 5.2 Protected Seating Areas

Standard

**5.2.1** Paving, planting and other landscape materials shall be coordinated with the design of the building and site.

Guidelines

**5.2.2** Ample landscaping with fountains and well shaded seating areas are highly encouraged, as well as the use of varied paving materials.
**5.2.3** Fences around plazas and outdoor areas should be semi-transparent and architecturally compatible with the building.

Benches and fountain in semi-private seating area.

## 6. Fences and Walls

*Intent: To ensure that fencing contributes to the overall design of commercial buildings and development.*

### 6.1 Fence and Wall Design

STANDARD

**6.1.1** All screening shall be designed as an integral part of the overall building design.

GUIDELINES

**6.1.2** Screening fences and walls are not recommended between commercial buildings and the street along primary and secondary street frontages. Screening fences and walls are permitted on internal side and rear property lines.

**6.1.3** Screening fences located to the sides and rear of properties should be visually compatible with adjacent ornamental fence designs and adjacent building architecture. Related colors, a cap or top articulation and related post spacing should be used to enhance compatibility.

**6.1.4** Adjacent to residential properties, screening fences should maintain a character and scale appropriate to residential neighborhoods; more detailed fencing types with heightened design detailing and additional ornamentation are recommended.

**6.1.5** Fences around plazas and outdoor areas should be semi-transparent and architecturally compatible with the building and should be no more than 3 feet tall.

Unobtrusive fence design contributes to overall building and site design.

## 6.2 Height

Guideline

**6.2.1** Overall height of screening fences and walls should not exceed six feet in height.

Maximum height for screening fences should be 6 feet.

## 6.3 Articulation

Guidelines

**6.3.1** The length of screening fences and walls adjacent to public rights of way should be minimized to the maximum extent feasible.

**6.3.2** Design elements should be used to break up long expanses of uninterrupted walls, both horizontally and vertically. Walls over three feet in height should include design elements such as textured concrete block, interlocking "diamond" blocks, formed concrete with reveals or similar materials. Landscape materials should also be used to provide surface relief.

## 7. Parking Area Landscaping

*Intent: In a warm summer climate such as Livermore's, shading is extremely important to reduce glare and heat buildup as well as to provide an attractive, functional and comfortable environment.*

Water drains through permeable surface material into the ground.

### STANDARDS

**7.1.1** All parking areas shall provide interior landscaping for shade and aesthetic enhancement.

**7.1.2** Parking lots shall be landscaped with broad branching shade trees at a minimum ratio of three trees per 10 parking spaces for single loaded stalls, six trees per 20 parking spaces for double loaded stalls and one tree for every three parking spaces for smaller parking bays.

**7.1.3** Curbed planter areas shall be provided at the end of each parking aisle to protect parked vehicles from the turning movements of other vehicles.

### GUIDELINES

**7.1.4** The use of permeable surfaces is recommended.

**7.1.5** Views of parking areas from public streets should be buffered by landscaping in order to reduce the visual impact of large parking areas.

**7.1.6** For security reasons, openings should be incorporated into the landscaping in order to permit clear views into the site.

**7.1.7** No more than ten parking spaces should be located in a row without an intervening landscaped planter strip. The planter strip should be the full depth and width of the adjacent parking spaces.

**7.1.8** Planter areas should provide a 5-foot minimum width of clear planting space.

**7.1.9** Wheel stops should be used adjacent to tree wells and planter areas to protect landscaping from car overhangs. In place of wheel stops, the planter curb may be used for car overhangs, provided the 5-foot minimum clear planting area is maintained.
**7.1.10** Drainage into swale areas is encouraged and may be accommodated through design elements such as flush curbs, perforated curbs and tree offsets.
**7.1.11** Plant material in and adjacent to swales should delineate the transition between the swale area and the surrounding landscape.

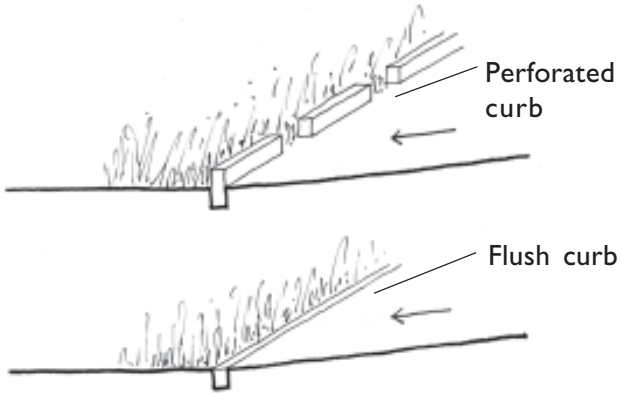

Water drains off surface lots into swale

## 8. Undeveloped Areas

*Intent: To ensure that vacant parcels do not detract from the overall goal of attractive and visually distinctive industrial development areas.*

Standards

**8.1.1** All undeveloped portions of each occupied parcel shall be maintained as landscaped area.
**8.1.2** For phased developments, landscaping shall be installed along the entire street frontage during the first phase.
**8.1.3** Undeveloped areas shall be maintained and irrigated and shall not be used for any kind of storage.

# E. Signs

## 1. Function

*Intent: To ensure that signs in mixed-use areas enhance the built environment and do not contribute to visual clutter.*

### 1.1 Purpose

Standard

**1.1.1** The primary purpose of signs shall be to identify a business or businesses and residences located at a specific site.

Guidelines

**1.1.2** Signs should not be used as advertisements.

**1.1.3** The design of a sign should be simple and easy to read.

**1.1.4** The sign's message should be limited to the business name or the logo of the business occupying the site.


Business sign spans storefront over entry.

## 2. Architectural Context and Placement

*Intent: To ensure that signs are an integral component of the design of a project.*

### 2.1 Context

Standards

**2.1.1** Bands, trim or color which is used to establish a corporate identity and does not relate to the architectural style or colors of the building shall be considered a sign.

**2.1.2** Standardized or corporate signs that do not relate to the building architecture shall not be permitted.

Guidelines

**2.1.3** Sign design should conform and be in harmony to the architectural character of the building.

**2.1.4** Signs attached to a building should be designed as integral components of the building and not obscure or conceal architectural elements.


Service entrance clearly signed with materials consistent with other building components.

### 2.2 Placement

Standards

**2.2.1** Signs shall not be permitted on top of any roof, and no sign attached to a wall or eave shall project above the eave line of the building.

**2.2.2** Where residential use is limited to the second floor, signs shall be limited to first floor.


Sign over retail entry.

Guidelines

**2.2.3** Building signs should be located within an area of the façade that enhances and complements the architectural design.

**2.2.4** Signs should generally be symmetrically located within a defined architectural space.

**2.2.5** Building signs should not obscure architectural details such as recesses, ornaments or structural bays.

## 3. Sign Design

*Intent: To ensure that signs are designed and constructed to make a positive contribution to the overall character of the mixed-use project.*

### 3.1 General Design

Standards

**3.1.1** Where internally illuminated lighting is used, only individual letter signs shall be permitted.

**3.1.2** No "can" (box type) signs with translucent plastic sign panel front and applied or painted lettering shall be permitted, except for tenant logos.

**3.1.3** "Can" signs with opaque faces and push through lettering shall only be permitted where the sign ties into the architecture of the building.

**3.1.4** Exposed raceways shall not be used.

Guidelines

**3.1.5** Sign design should be appropriate to the business establishment, building architecture and area in which it is located.

**3.1.6** Exposed neon signs are strongly discouraged.


Small, well-crafted signs can enhance the character of a retail area.

## 3.2 Wall or Window Signs

Standards

**3.2.1** Externally illuminated or halo lit signs are encouraged and where used shall have an opaque face.

**3.2.2** Window signs shall not be placed in a manner that obscures primary views into and out of the storefront.

Guidelines

**3.2.3** Painted signs and letters shall present a neat and aligned appearance. The services of a skilled sign painter are strongly recommended.

**3.2.4** Where individual letters are used, letters should be three dimensional, created by raised letter forms mounted to the building façade or sign panel, or by incised openings cut-out from the sign panel.

**3.2.5** For signs identifying hours of operation, menus, newspaper reviews and other customer information, it is recommended that these be framed, board-mounted or plastic laminated for a finished appearance.

## 3.3 Projecting Signs

STANDARD

**3.3.1** A minimum separation of 6 inches shall be provided between the building face and the sign.

GUIDELINES

**3.3.2** Projecting signs should be located near the front entry of a store.

**3.3.3** Structural supports for projecting signs should be designed so that their visual appearance is minimized and coordinated with the overall architecture and color scheme of the storefront. They should not appear to be "tacked on" without regard for the alignments, proportions, colors and forms of the adjacent buildings and signs.

**3.3.4** Sign fonts should be selected to provide both visual clarity and artistic expression.

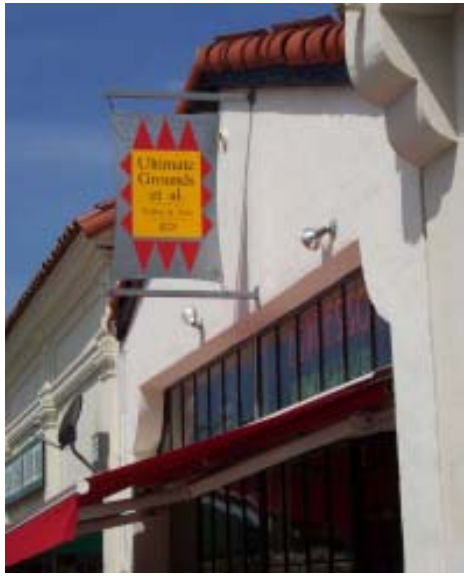

Projecting sign over sidewalk.

Projecting signs over pedestrian walkway.

## 3.4 Awning and Canopy-Mounted Signs

### Standards

**3.4.1** Any signing on awnings shall be applied directly onto the awning material.
**3.4.2** Awning signs shall be restricted to the lower one-third of the awning and the awning valence.

### Guidelines

**3.4.3** For canopies, individual three-dimensional letters are recommended. Individual letters or sign panels may be mounted within the vertical fascia of the canopy or attached to the canopy above the fascia.
**3.4.4** Signs attached to the underside of awnings should be made of high quality materials.


Business signing applied to awnings.


Business signing applied to awning valance.

## 3.5 Freestanding Signs

Guidelines

**3.5.1** All freestanding signs should be designed to relate to the architecture of the building or development they serve.

**3.5.2** Exterior materials, finishes and colors should be the same or similar to those of the building or structures on site. High quality, durable materials should be used as these types of signs will receive a higher degree of contact with the public than most building components.

Freestanding tennant sign is compatible with building architecture.

## 3.6 Multiple-Tenant Complexes

Standard

**3.6.1** Multiple-tenant buildings and complexes shall develop a Master Sign Program to minimize the potential visual conflicts and competition among tenant signs, while ensuring adequate identification for each tenant.

Guidelines

**3.6.2** Free-standing signs may include the names of major tenants.

**3.6.3** Free-standing signs used to identify such complexes should include the name and address of the complex.


Sign for multi-tenant complex.

## F. Lighting

This section contains the standards and guidelines for exterior lighting in the mixed-use areas of the City. The intention for these guidelines is to ensure that the design of fixtures and the light provided contributes to the character of development and does not impact adjacent development.

### 1. Design

Standards

**1.1.1** Exterior lighting shall be designed as an integral part of the building and landscape design.

**1.1.2** Site plans and architectural plans shall include the location of fixtures, their design and the nature and level of the illumination they will provide.

**1.1.3** Illumination levels shall be provided to address security concerns, especially for parking lots, pedestrian paths, outdoor gathering spaces, at building entries and any other pedestrian accessible areas.

Guidelines

**1.1.4** Decorative light fixtures, such as gooseneck lighting, are strongly encouraged.

**1.1.5** Lighting should generally be designed to include cut-offs to minimize the lighting of the sky.

Exterior wall sconce lighting enhances architectural design.

## 2. Lighting Height

Standard

**2.1.1** The height of luminaries shall be in scale with the building and site design and in no case shall the height exceed 18 feet in height from grade.

Guidelines

**2.1.2** Lighting sources should be kept as low to the ground as possible while ensuring safe and functional levels of illumination.

**2.1.3** Area lighting should be directed downward or employ control features so as to avoid light being directed offsite as well as to avoid lighting of the night sky.

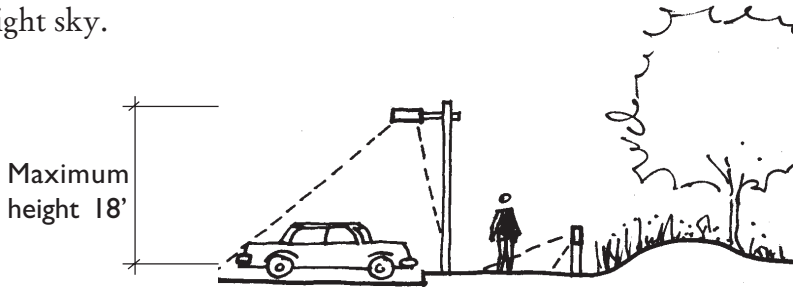


Lighting directed downward.

## 3. Area of Illumination

Standard

**3.1.1** The light source for externally illuminated signs must be positioned so that light does not shine directly on adjoining properties, cause glare, or shine in the eyes of motorists or pedestrians.

Guidelines

**3.1.2** Lighting should be located so as to minimize the impact of lighting upon adjacent buildings and properties, especially residential uses.

**3.1.3** In general, the location of lighting should respond to the anticipated use and not exceed the amount of illumination required by users.
**3.1.4** Illumination over an entire area or the use of overly bright lighting is strongly discouraged. The use of a number of smaller lights is preferable to larger, more intense lights.
**3.1.5** Lighting for pedestrian movement should illuminate changes in grade, path intersections and other areas along paths which, if left unlit, would cause the user to feel insecure. Recommended minimum levels of illumination along pedestrian paths between destinations is 0.5 foot-candles. At pedestrian destination points such as entryways, plazas and courtyards, lighting levels should typically achieve illumination of 1 foot-candle.
**3.1.6** The placement of light standards, whether for street lights or garden lights, should not interfere with pedestrian movement.

## 4. Parking Area Illumination

Guidelines

**4.1.1** Illumination should be concentrated along the pedestrian paths leading to parking areas and in the specific areas where cars are parked.
**4.1.2** Illumination should achieve a lighting level of 1 foot-candle on the parking lot surface.

## 5. Prohibited Lights

Standard

**5.1.1** No outdoor lights shall be permitted that blink, revolve, flash or change intensity.